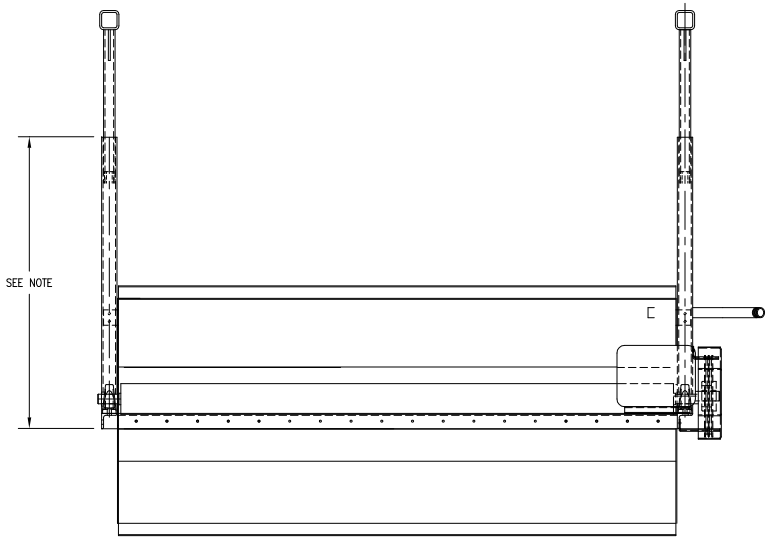

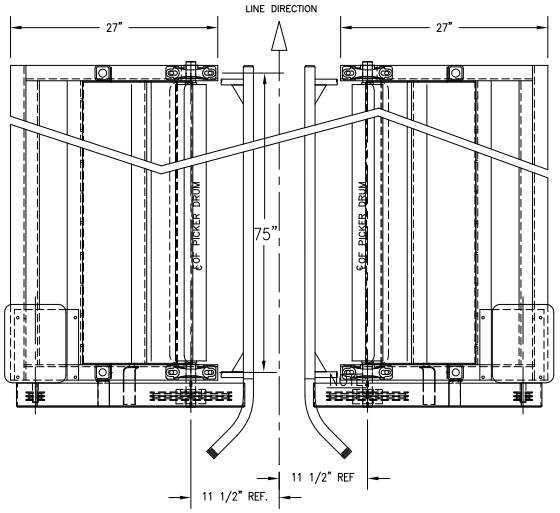

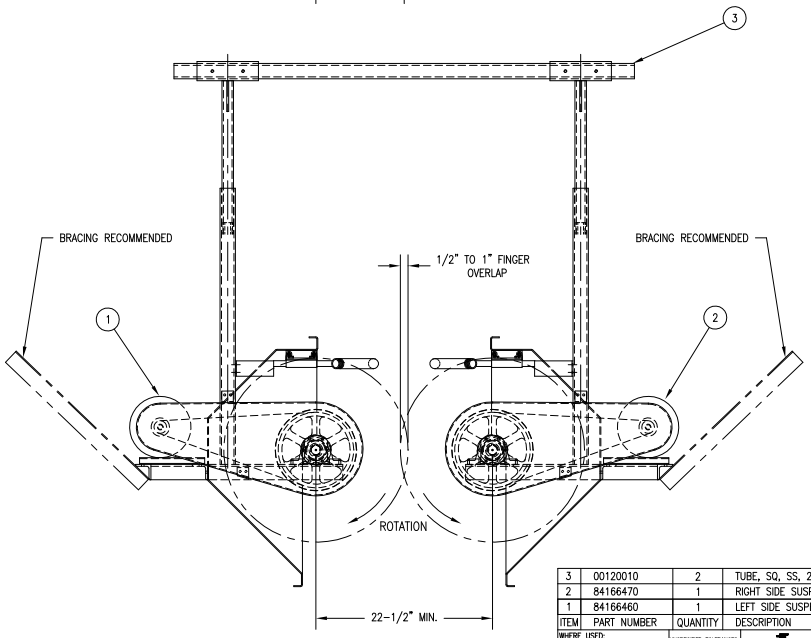

ITEM	PART NUMBER	QUANTITY	DESCRIPTION
3	00120010	2	TUBE, SQ, SS, 2 x 1/4 W. x 60" Lg.
2	84166470	1	RIGHT SIDE SUSPENDED MOUNT ASSY.
1	84166460	1	LEFT SIDE SUSPENDED MOUNT ASSY.

WHERE USED:
UNLESS OTHERWISE SPECIFIED, DRILL POINTS PERMISSIBLE

THIS DRAWING AND ANY PRINT THEREOF IS THE PROPERTY OF FOODCRAFT EQUIPMENT COMPANY, INC. AND IS SUBJECT TO RETURN ON REQUEST BY THIS COMPANY. THE INFORMATION SHOWN IS CONFIDENTIAL AND THE RECIPIENT BY ACCEPTING THIS DRAWING AGREES NOT TO USE ANY INFORMATION CONTAINED THEREON IN ANY MANNER WHICH WILL BE DETRIMENTAL TO FOODCRAFT EQUIPMENT COMPANY, INC.

UNSPECIFIED TOLERANCES
FRACTIONAL ± 1/32
DECIMAL
2 PLACE ±.015
3 PLACE ±.005
ANGULAR ±1/2
BREAK ALL EDGES .05 MAX X 45°

DATE 3/2/99
DRAWN BE
SHEET 1 OF 1

FoodCraft Equipment Co., Inc.
4225 SW Kirklawn, Topeka KS 66609 USA
Telephone (800)-244-2473 FAX (785) 267-9421

NAME: SUSPENDED MOUNT STRADDLE PICKER
MATERIAL SPEC. | MATERIAL | SIZE
FINISH | DWG. NO. 91012601mod | REV. –
HEAT TREAT

REV.	DESCRIPTION	DATE – BY